Sheet Metal Enclosures
Consumer Units

Power and productivity
for a better world™

Consumer Units
Comby and Housemaster

Contents

General 2

Ordering Details Comby 3

Ordering Details Housemaster 4-5

Dimension details 6

Consumer Units
Comby and Housemaster
General

The ABB range of sheet steel consumer units and distribution boards are designed for safety, reliability and availability in the electrical building installation. Complying to IEC 439 - 3, BS EN 60439 – 3

Type Test Certification

Features:

All ABB consumer units incorporate unique design features making installation, modification an easy operation and less time consuming.

- Easy handling for the user.
- Quick & easy electrical solutions for various installations.
- Terminals Large 16 mm2 earth and neutral terminals delivered in the open position.

Consumer Units
Comby
Ordering details

Application

Comby consumer units are designed to suit installations in domestic and commercial installations, easy to install, attractive and highly reliable. Fitted with either sheet steel flap or clear plastic flap for visual inspection of components. Complete with neutral and earth terminals and din rail.

Technical Data

Standard	IEC 439- 3 & BS 60439 part 1 & 3
Max. load	100 amps
Max. voltage	230 / 400 V ac, 50 / 60 Hz
Range	7, 10, 16 and 20 modules
Degree of protection	IP 30
Enclosure material	Cold rolled sheet steel Box and cover 1 mm (Aluzinc steel on request)
Enclosure finish	Gray, RAL 7035

Steel flap – Surface mounting

No. of ways	No. of Modules	Dimensions mm H x	W x	D	Ordering details Type code	Type No.	Weight kg
1	7	256	209	110	ECS 107 DS	1SKB 107 632 C0002	2.8
1	10	256	236	110	ECS 110 DS	1SKB 110 632 C0002	3.4
1	16	256	366	110	ECS 116 DS	1SKB 116 632 C0002	4.4
1	20	256	440	110	ECS 120 DS	1SKB 120 632 C0002	4.8

Steel flap – Flush mounting

No. of ways	No. of Modules	Dimensions mm H x	W x	D	Ordering details Type code	Type No.	Weight kg
1	7	276	229	110	ECS 107 DF	1SKB 107 932 C0002	2.8
1	10	276	283	110	ECS 110 DF	1SKB 110 932 C0002	3.4
1	16	276	386	110	ECS 116 DF	1SKB 116 932 C0002	4.4
1	20	276	460	110	ECS 120 DF	1SKB 120 932 C0002	4.8

Consumer Units
Housemaster
Ordering details

1SKC 015 003 F0001

Application

Housemaster consumer units are designed to suit installations in residential commercial and industrial installations, easy to install and highly reliable.
Fitted with sheet steel flap for visual inspection of components.
Complete with neutral and earth terminals. Unit comes complete with incoming devices.
Surface mounting only, (flush on request).

Technical Data

Standard	IEC 439- 3 & BS 60439 part 1 & 3
Max. load	100 amps 80 amps for 4 way RCCB
Max. voltage	230 V ac, 50 Hz
Range	4, 7, 11, 16 and 20 SP & N ways Split load 8, 12, 16 ways
Degree of protection	IP 30
Enclosure material	Cold rolled sheet steel Box and cover 1 mm (Aluzinc steel on request)
Enclosure finish	Gray, RAL 7035

Steel flap – Surface mounting

1SKC 015 004 F0001

With Isolator (E202/100A) Incomer

No. of ways	Dimensions mm H x	W x	D	Ordering details Type code	Type No.	Weight kg
4	256	155	110	HSMS 04C	1SKB 106 142 C4001	2.4
7	256	210	110	HSMS 07C	1SKB 109 142 C4001	3.1
11	256	282	110	HSMS 11C	1SKB 113 142 C4001	3.7
16	256	368	110	HSMS 16C	1SKB 118 142 C4001	4.7
20	256	440	110	HSMS 20C	1SKB 122 142 C4001	5.1

With RCCB (F202AC/100/0.3A) Incomer, for HSRC 04C (F202AC/80/0.03A)

No. of ways	Max. load A	Dimensions mm H x	W x	D	Ordering details Type code	Type No.	Weight kg
4	80	256	155	110	HSRC 04C	1SKB 106 142 C6001	2.5
7	100	256	210	110	HSRC 07C	1SKB 109 142 C6001	3.2
11	100	256	282	110	HSRC 11C	1SKB 113 142 C6001	3.8
16	100	256	368	110	HSRC 16C	1SKB 118 142 C6001	4.8
20	100	256	440	110	HSRC 20C	1SKB 122 142 C6001	5.2

With Split load (E202/100A+F202AC/80/0.03A) Incomer

No. of ways	Dimensions mm H x	W x	D	Ordering details Type code	Type No.	Weight kg
4+4	256	282	110	HSSL 4+4C	1SKB 113 142 C8001	4.1
6+6	256	368	110	HSSL 6+6C	1SKB 118 142 C8001	5.1
8+8	256	440	110	HSSL 8+8C	1SKB 122 142 C8001	5.5

With Split load (E202/100A+F202AC/80/0.03A+F202AC/63/0.03A) Incomer

No. of ways	Dimensions mm H x	W x	D	Ordering details Type code	Type No.	Weight kg
4+4	256	282	110	HSSE4186C17	1SKB 113142 C8501	4.7
6+6	256	368	110	HSSE6186C17	1SKB 118142 C8501	5.7
8+8	256	440	110	HSSE8186C17	1SKB 122142 C8501	6.2

Consumer Units
Housemaster
Ordering details

With Split load (E202/100A+F202AC/80/0.03A) Incomer

No. of ways	Dimensions mm H x	W x	D	Ordering details Type code	Type No.	Weight kg
4+4	256	282	110	HSSE4166C17	1SKB 113142 C8566	4.7
6+6	256	368	110	HSSE6166C17	1SKB 118142 C8566	5.7
8+8	256	440	110	HSSE8166C17	1SKB 122142 C8566	6.2

Accessories – single pole pin type comb busbar
Max. Current 100A
C.S.A 30 mm

No. of modules	Used for	Ordering details Type code	Type No.	Weight kg
5	ECS 104C HSMS/RC 04C	PNCB-05	1SKB 034 702 P0005	0.022
8	ECS 107C HSMS/RC 07C	PNCB-08	1SKB 034 702 P0008	0.035
12	ECS 111C HSMS/RC 11C	PNCB-12	1SKB 034 702 P0012	0.052
17	ECS 116C HSMS/RC 16C	PNCB-17	1SKB 034 702 P0017	0.074
21	ECS 120C HSMS/RC 20C	PNCB-21	1SKB 034 702 P0021	0.091
10	HSSL 4+4C	PNCB-10	1SKB 034 702 P0010	0.043
14	HSSL 6+6C	PNCB-14	1SKB 034 702 P0014	0.065
18	HSSL 8+8C	PNCB-18	1SKB 034 702 P0018	0.082

Consumer Units
Comby and Housemaster
Dimension details

Comby steel flap consumer unit surface mounted

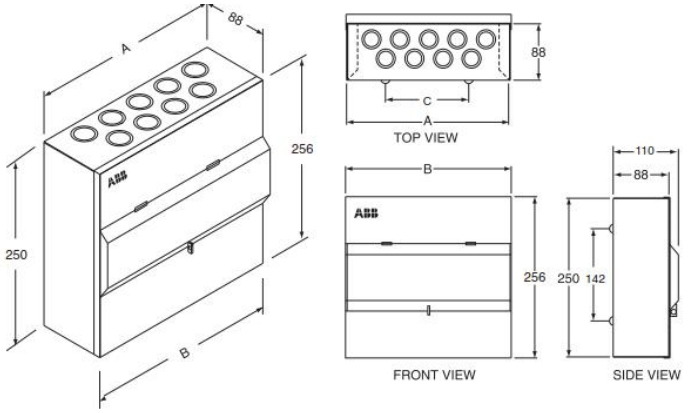

Type Code	No. of Modules	A mm	B mm	C mm
ECS 107 DS	7	203	209	133
ECS 110 DS	10	257	263	187
ECS 116 DS	16	262	366	292
ECS 120 DS	20	434	440	366

Comby steel flap consumer unit flush mounted

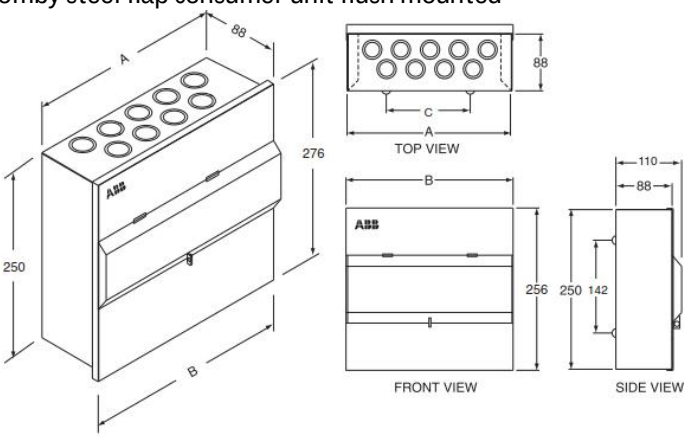

Type Code	No. of Modules	A mm	B mm	C mm
ECS 107 DF	7	203	209	133
ECS 110 DF	10	257	263	187
ECS 116 DF	16	262	366	292
ECS 120 DF	20	434	440	366

Housemaster compact sheet steel consumer unit surface mounted

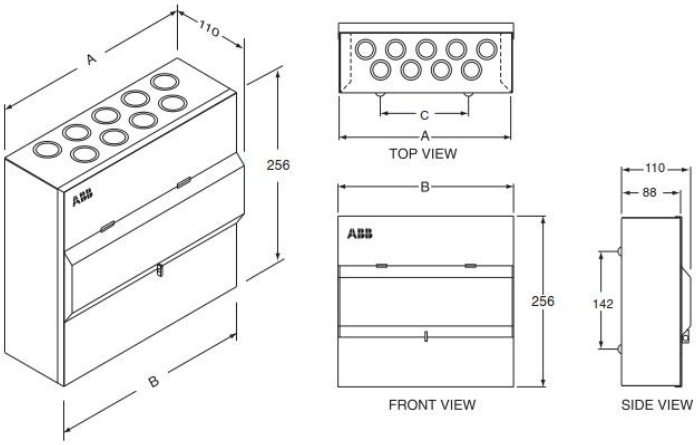

Type Code	No. of Ways	A mm	B mm	C mm
HSMS 04C HSRC 04C	6	152	155	77
HSMS07C HSRC 07C	9	207	210	133
HSMS 11C HSRC 11C HSSL 4+4C	13	257	263	187
HSMS 16C HSRC 16C HSSL 6+6C	18	365	368	292
HSMS 20C HSRC 20C HSSL 8+8C	22	437	440	360

Contact us

ABB
7 Dr. Mohamed Kamel Hussein St.,
El Nozha El Gedeida, Heliopolis. Cairo, Egypt.
Tel.:
Fax:
LVProducts@eg.abb.com

www.abb.com

As part of its on-going product improvement, ABB reserves the right to modify the characteristics or the products described in this document. The information given is not-contractual. For further details please contact the ABB company marketing these products in your country.

No:1SKC802015C0205 - Printed in Egypt (May 2015) - ein advertising designs

Power and productivity
for a better world™